ASTRUP

80165118
ASTRUP 70 COAL COAL CRC 430 700-827 BPI CL1 MR P1
Table lamp

Description

- ASTRUP Table lamp
- Color: COAL (RAL 7021)
- Internal anodized finishing aluminum gear unit cover : COPPER
- Housing: Co-extruded polycarbonate/PMMA for inside/outside use
- End caps & fixing straps: Stainless steel 316L painted COAL (RAL 7021)
- External metal parts in 316L stainless steel and screws in A4 stainless steel
- Structure: COAL (RAL 7021) powder-coated aluminium with anti-corrosion treatment
- Gaskets: Gaskets moulded in EPDM

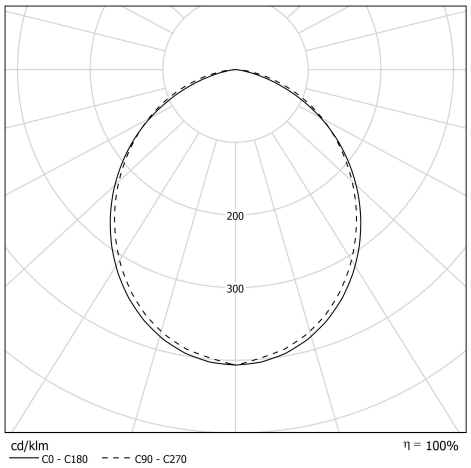

Light specifications and controlling

- High-efficiency removable LED modules (IRC>80, 3 SDCM)
- Luminous flux: 700 lm
- Colour temperature: 2700 K
- Dimming: Built-in dimming button

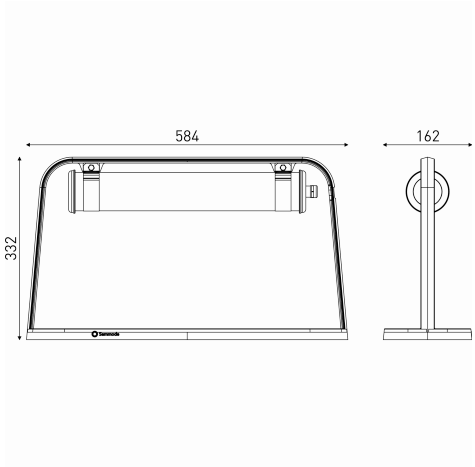

Installation and maintenance

- Structure dimensions : 600 x 350 x 162 mm
- Provided with 4m 5G1,5 cable with tinned copper meshwork under transparent tubing with a european plug IP44
- Easily removable LED modules and driver

Characteristics

- Warranty : 5 years
- 50 000 h L80/B10 at 25°C
- Operating temperature: -20°C to +30°C
- Protection: IP68
- Resistance to IK shocks: IK10
- Electrical class: Class I
- Power supply: 220-240 V 50/60 Hz
- Power consumption: 13 W
- Inrush current - Ipeak: 5 A
- Photobiological hazard: Group 0
- Peak duration - Twidth: 100 µs
- Fire resistance: 650 °C
- Number of luminaires on automat type B16: 130 pcs
- Weight: 5 kg

© Sammode – 11 sept. 2024 - Technical specifications subject to change